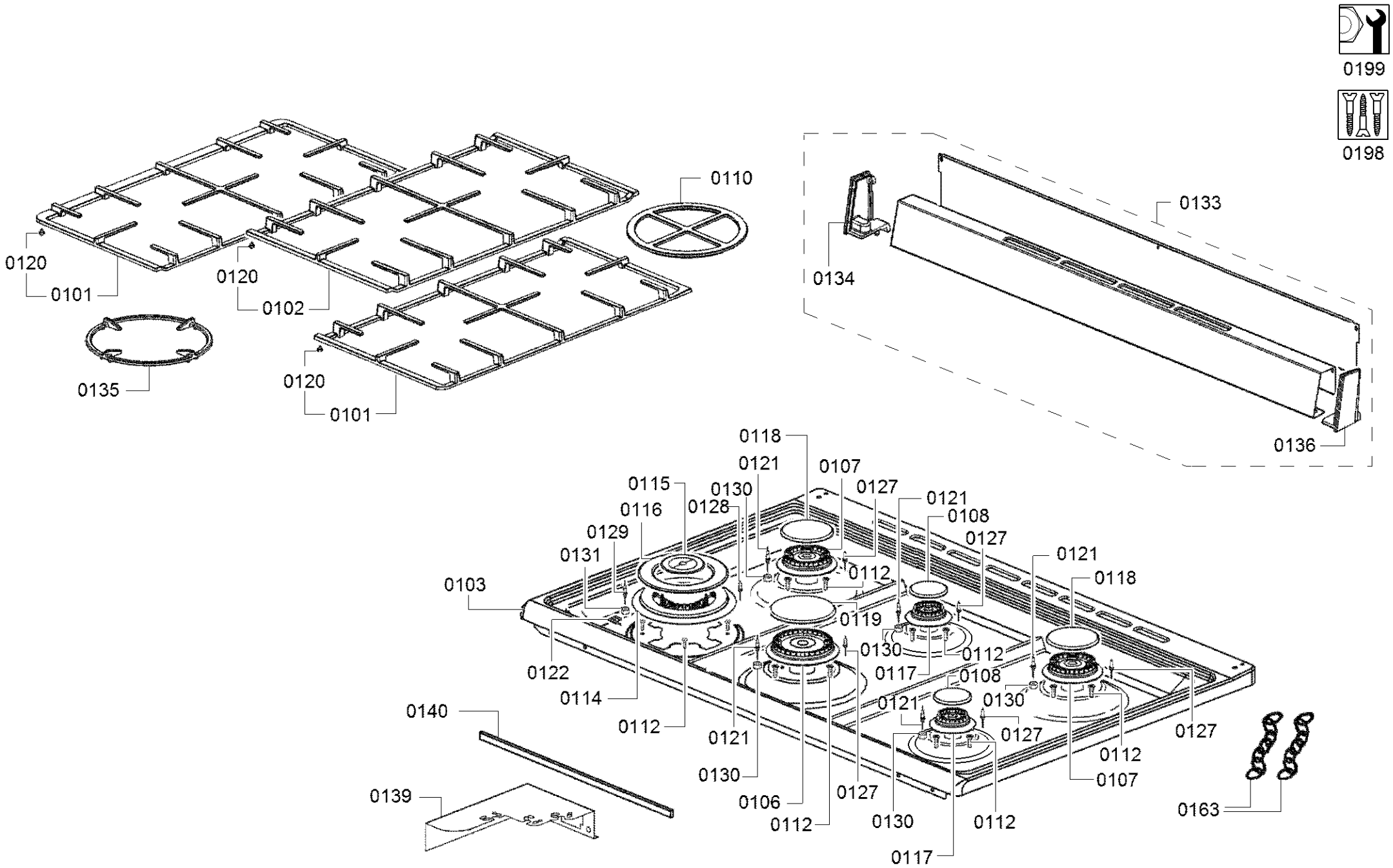

Copyright © by Bosch

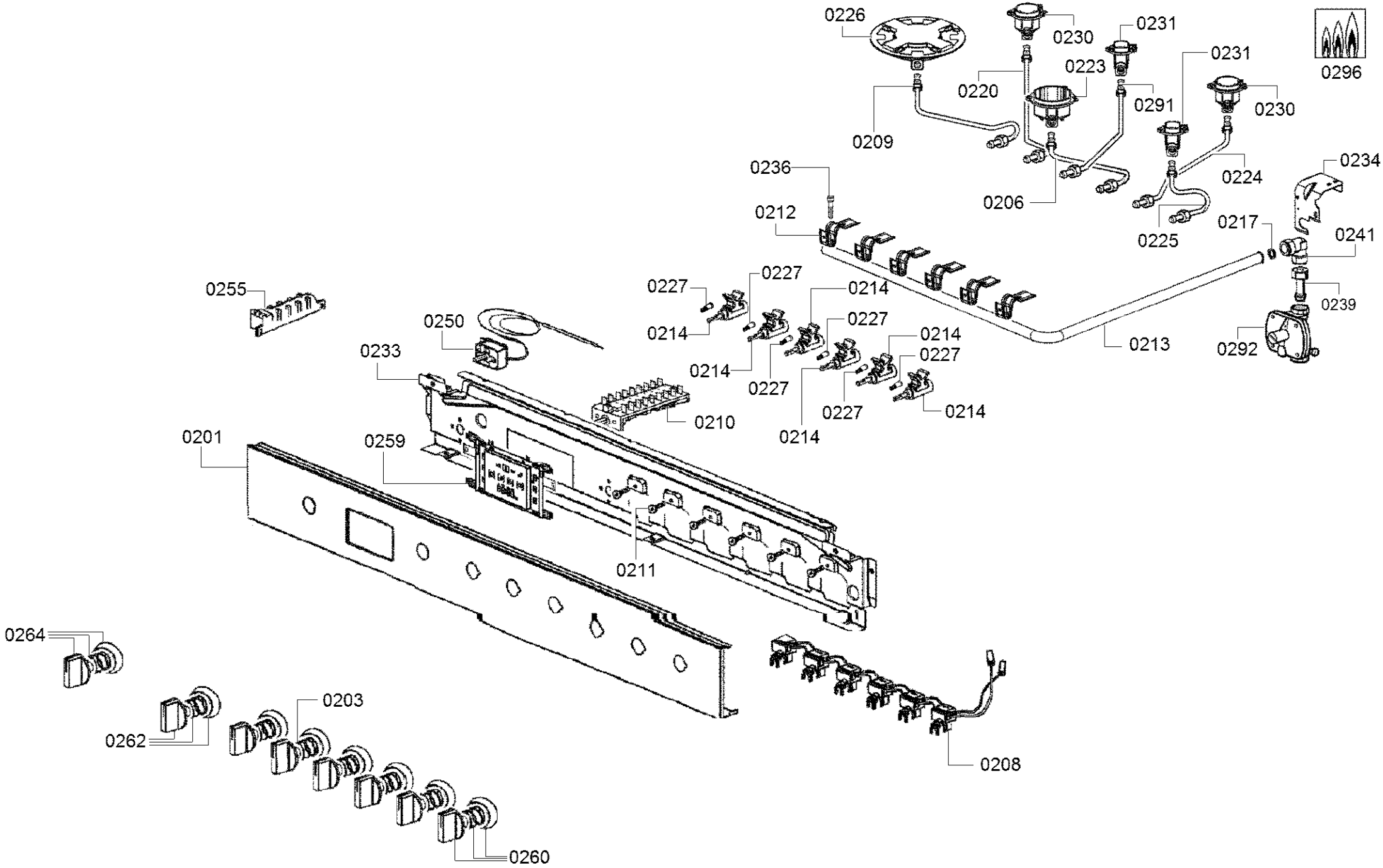

58300000192619 aet 000 b 2/5

Copyright © by Bosch

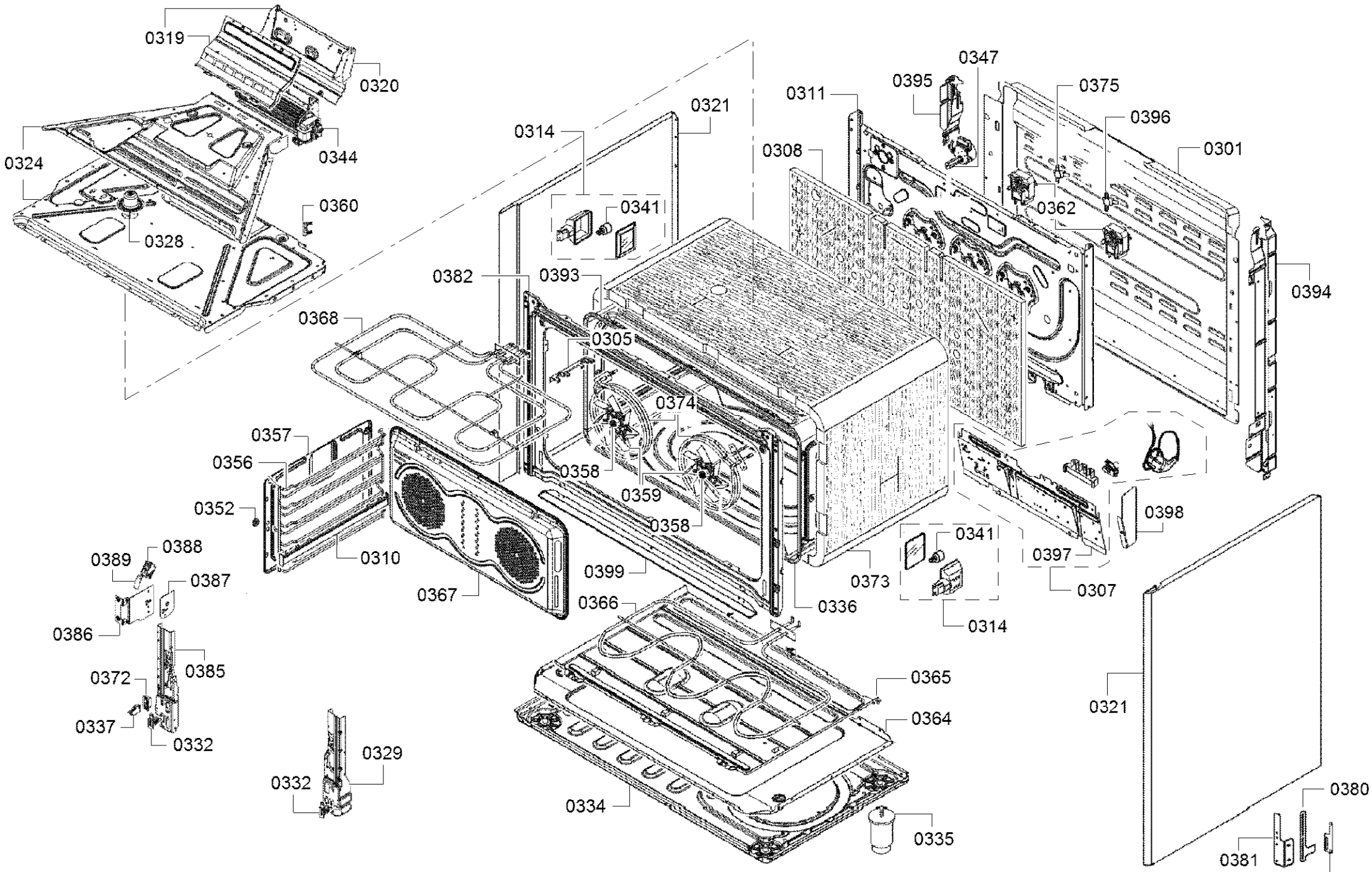

58300000192619 aet 000 b 3/5

Copyright © by Bosch

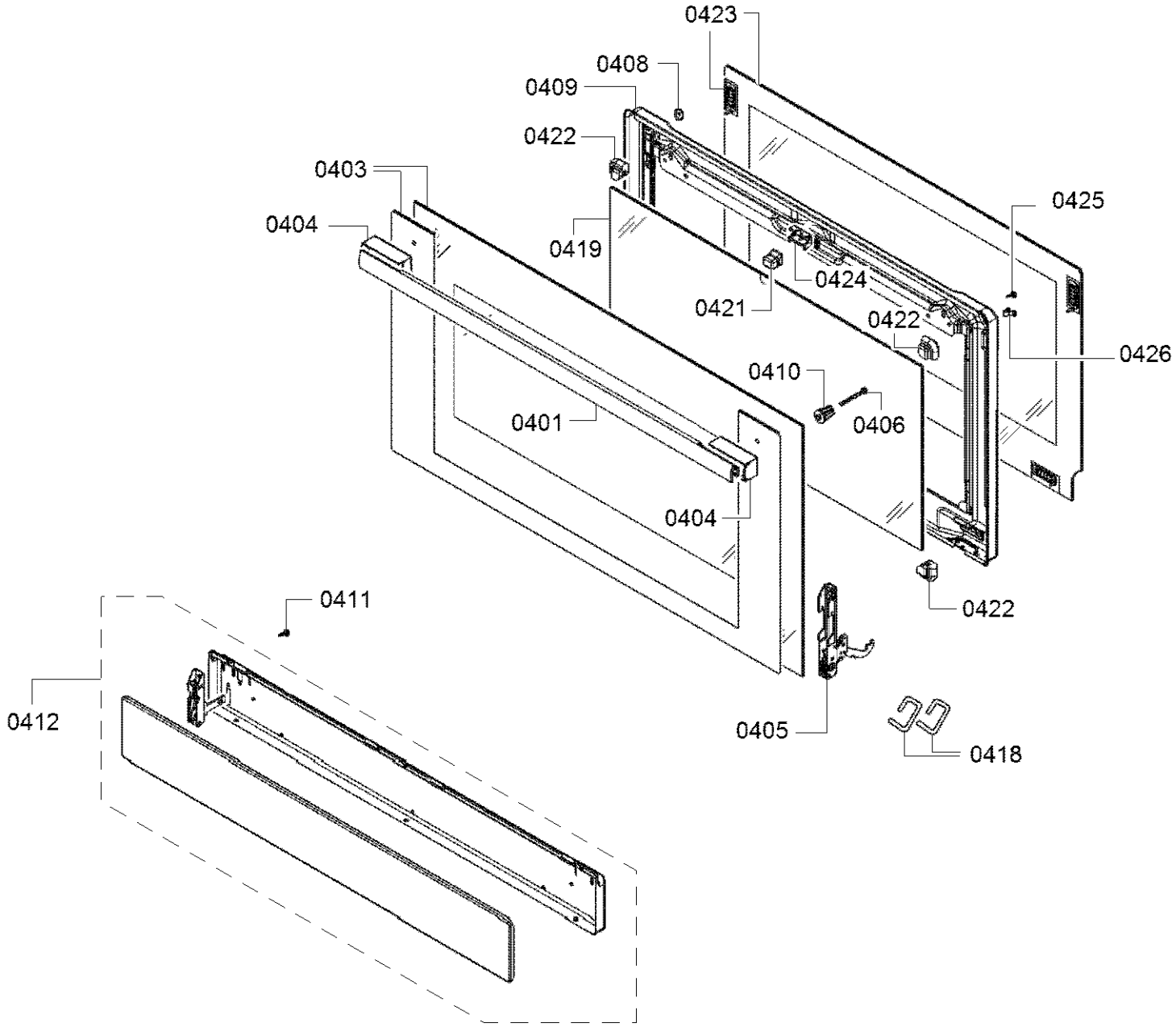

58300000192619 aet 000 b 4/5

Copyright © by Bosch

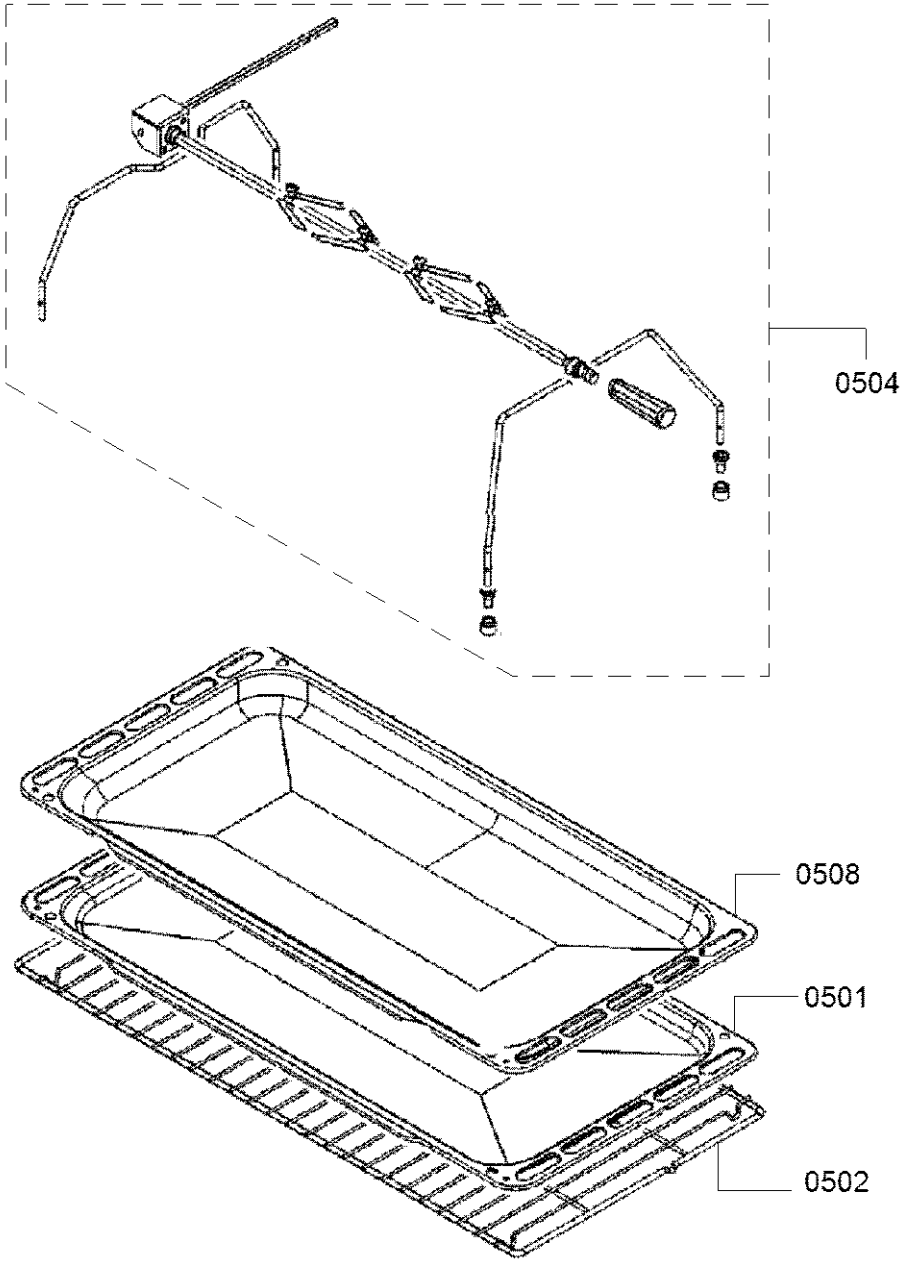

58300000192619 aet 000 b 5/5

Copyright © by Bosch